Journal of Energy

VOLUME 75 Number 3 | 2026

journal homepage: http://journalofenergy.com/

An Accurate Detailed Model for Transformer Disc Windings Suitable for Medium Frequency Range

Jalal Piri, Hassan Reza Mirzaei, Mohammed Bilal Ghorbal, Ebrahim Rahimpour

Summary **—Accurate modeling of transformer windings is crucial for monitoring their condition and detecting potential faults. Traditional methods may sometimes not be accurate enough at high frequencies. To address this challenge, this study proposes a more detailed yet computationally efficient model that represents each turn of a disc winding using simple RLCM elements. Unlike the Multi-Transmission Line (MTL) model, which is complex and resource-intensive, the proposed model achieves reliable accuracy up to 2 MHz while significantly reducing modeling effort. To validate its performance, the frequency response (FR) of the test winding was measured using a conventional Sweep Frequency Response Analysis (SFRA) device. The results were compared with those obtained from simulations using a traditional detailed model, the MTL model, and a newly proposed detailed model. The comparison employed different evaluation criteria, including the Index of Frequency Deviation (IFD), Index of Amplitude Deviation (IAD), and Normalized Cross Correlation (NCC). The findings demonstrate close agreement between the measured and simulated FRs, confirming the accuracy and efficiency of the new model. The results demonstrate that the developed model provides a practical and effective framework for fault detection studies in real transformer windings, representing a crucial step toward reliable condition monitoring.**

Keywords **— Modeling of transformer winding, detailed model, multi-transmission line model, frequency response.**

I. Introduction

Power transformers are critical assets in electrical power systems, and their reliable operation is essential to maintaining the stability and continuity of energy delivery. Internal defects, such as mechanical deformations and electrical short circuits, can arise from fast-transient overvoltages induced by lightning strikes or switching operations, leading to significant maintenance costs and increased diagnostic effort [1]. Traditional diagnostic approaches often rely on extensive and time-consuming measurements to assess transformer condition. An alternative strategy involves developing accurate computational models of transformer windings that replicate their electrical behaviour under a range of operating and fault conditions. Such models can support efficient analysis, accelerate fault detection, and reduce the dependency on costly experimental procedures.

A variety of modeling frameworks have been proposed to represent the frequency-dependent characteristics of transformer windings. The selection of an appropriate model is typically influenced by the degree of internal information available for the winding under study. In general, winding models fall into three categories: white-box [2], black-box [3], and gray-box models [4]. White-box models assume complete knowledge of winding geometry and physical parameters. In contrast, black-box models do not require internal details and instead derive electrical behaviour solely from terminal measurements, such as those obtained through Frequency Response Analysis (FRA) [3]. Gray-box models occupy an intermediate position, incorporating partial structural information and estimating unknown parameters using optimization algorithms, such as Particle Swarm Optimization (PSO) [5].

Within the white-box paradigm, detailed disc-based RLCM and turn-based Multi-Transmission Line (MTL) representations are widely used [6-8]. The choice between these formulations is typically determined by the study's specific objectives. Detailed disc-based models are well-suited for investigations focused on electrical disc-to-disc short circuits and mechanical deformations, such as axial, radial, and disc-spacing faults, where accurate simulation in the 0.1–1 MHz frequency range is required [6]. Conversely, turn-based MTL models are often adopted for analyses involving turn-to-turn short circuits or for the localization of partial discharges [7], offering extended frequency-domain fidelity up to several MHz, albeit at the cost of increased modeling complexity and computational effort. To address the limitations inherent in both disc- and turn-based models, hybrid modeling strategies have been introduced that leverage the strengths of each approach while mitigating their weaknesses [9]. Nevertheless, combining the turn-based MTL with the detailed RLCM models can impose stringent accuracy requirements that are challenging to meet in practice.

In this study, a turn-based detailed RLCM transformer winding model is proposed as an enhancement of conventional disc-based detailed models. The proposed formulation improves high-frequency simulation accuracy and provides a more refined representation of winding behaviour across a broader spectral range, enabling more reliable diagnostics without excessive model complexity. The remainder of this paper is organized as follows. Section II details the modeling methodologies for the HV disc winding. Section III describes the experimental setup for a specially fabricated HV single disc winding and the procedure for measuring its Frequency Response (FR) under healthy conditions. Section IV presents a comparative analysis between measured and simulated FRs obtained from the studied models. Finally, Section V summarizes the principal findings and contributions of this work.

(Corresponding author: Ebrahim Rahimpour)

Jalal Piri, Hassan Reza Mirzaei and Mohammed Bilal Ghorbal are with University of Zanjan, Electrical Engineering Department, Zanjan, Iran (email: jpiri@znu.ac.ir, hr.mirzaei@znu.ac.ir, bilalghorbal@znu.ac.ir)

Ebrahim Rahimpour is with Technical University of Applied Sciences Würzburg-Schweinfurt, Würzburg, Germany (email: Ebrahim.rahimpour@thws.de)

© 2026 Copyright for this paper by authors. Use permitted under Creative Commons Attribution-NonCommercial (CC BY-NC) 4.0 International License

II. Modelling of the Transformer Winding Methods

A. Turn-based MTL model

According to transmission line theory, each turn of a transformer winding can be represented as a single transmission line characterized by distributed per-unit-length parameters: series resistance R_i, series inductance L_i, shunt conductance G_i, and capacitance C_i [7]. In the frequency domain, the equivalent series impedance and shunt admittance of the ith turn are expressed as $Z_i=R_i+j\omega L_i$ and $Y_i=G_i+j\omega C_i$, respectively, where ω denotes the angular frequency. By assigning distinct voltages and currents at sending and receiving terminals to each transmission line segment, with corresponding V_{Si}, I_{Si} at the sending end and V_{Ri}, I_{Ri} at the receiving end, the entire winding comprising n turns and grounded through a resistance R_E can be modelled as an MTL network (as illustrated in Fig. 1) [7].

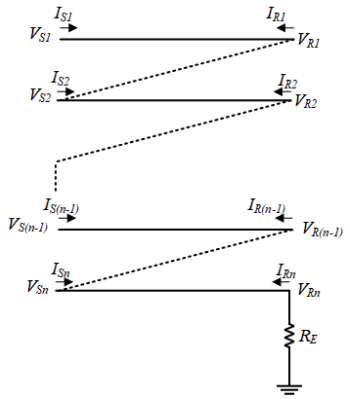

Fig. 1. Multi-Transmission Line (MTL) model [7]

The parameters R_i, L_i, C_i, and G_i for each turn may be obtained through a range of techniques, including rational function fitting such as vector fitting based on measured data [10], finite element analysis to capture electro-magnetic interactions [7], or analytical and numerical computations based on detailed geometric and insulation properties of the winding conductors [11]. Applying the travelling-wave formulation to the MTL network yields a set of relationships between the sending and receiving currents across all turns, which can be cast in matrix form as follows [11]:

$$\begin{bmatrix}[I_S]_{n\times1}\\ [I_R]_{n\times1}\end{bmatrix}_{2n\times1}=\begin{bmatrix}[A]_{n\times n} & -[B]_{n\times n}\\ -[B]_{n\times n} & [A]_{n\times n}\end{bmatrix}_{2n\times2n}\begin{bmatrix}[V_S]_{n\times1}\\ [V_R]_{n\times1}\end{bmatrix}_{2n\times1} \quad (1)$$

where:

$$[I_S]=[I_{S1}\ \ \dots\ \ I_{Sn}]^T,[V_S]=[V_{S1}\ \ \dots\ \ V_{Sn}]^T$$
$$[I_R]=[I_{R1}\ \ \dots\ \ I_{Rn}]^T,[V_R]=[V_{R1}\ \ \dots\ \ V_{Rn}]^T,$$

$$[A]=[Y_0]coth([\Gamma][l]),\ [B]=[Y_0]cosech([\Gamma][l])$$

Let $[\Gamma]^2=[Z][Y]$, $[Y_0]=[Z]^{-1}[\Gamma]=[Y][\Gamma]^{-1}$, $[l]=\mathrm{diag}[l_1, l_2,\dots, l_n]$ denote the diagonal length matrix of the turns; here, $[Z]=[R]+j\omega[L]$ and $[Y]=[G]+j\omega[C]$ are the square matrices of per-turn impedance and admittance parameters. By enforcing continuity conditions between adjacent turns, namely $I_{Ri}=-I_{S(i+1)}$, $V_{Ri}=V_{S(i+1)}$, and the termination condition, $V_{Rn}=-R_E I_{Rn}$, the dimensionality of the system can be reduced, yielding an $(n+1)\times1$ formulation of the travelling-wave equations as follows [11]:

$$\begin{bmatrix}V_{S1}\\ V_{S2}\\ \dots\\ V_{Sn}\\ V_{Rn}\end{bmatrix}=[P]\begin{bmatrix}I_{S1}\\ 0\\ \dots\\ 0\\ I_{Rn}\end{bmatrix} \quad (2)$$

where the matrix $[P]$ is a square RLCM matrix of size $(n+1)\times(n+1)$. Solving this system provides the input and output voltages of the winding, V_{S1} and V_{Rn}, respectively, from which the FR of the MTL model is computed as [11]:

$$FR(\omega)=20\log_{10}\left|\frac{V_{Rn}}{V_{S1}}\right|=\frac{50P(n+1,1)}{50P(1,1)+P(1,1)P(n+1,n+1)-P(n+1,1)P(1,n+1)} \quad (3)$$

B. Disc-based detailed RLCM model

In the disc-based transformer winding model, the winding is partitioned into N equivalent units, each comprising D discs. Each ith unit is represented by a set of lumped RLCM elements, as illustrated in Fig. 2. The series resistance R_{Si} accounts for the copper losses within the ith unit, while the self-inductance L_{Si} and mutual inductance $M_{i,j}$ represent, respectively, the self-inductive behaviour of unit i and the magnetic coupling between units i and j. To model dielectric elements, the series insulation loss of discs in unit i is represented by R_{Pi}, and R_{ei} characterizes the insulation between unit i and ground (e.g., the core or tank). The series capacitance K_i captures the electrostatically stored energy within the discs of unit i, while the shunt capacitance C_{ei} represents the capacitance between unit i and earth. This lumped-parameter framework reflects the distributed electrical behaviour of the winding by incorporating resistive, inductive, and capacitive couplings among elements, consistent with equivalent RLC network approaches used in high-frequency transformer models. It should be noted that all model parameters, including the frequency-dependent elements, can be determined analytically from winding geometry, material properties, and insulation characteristics, considering the skin, proximity, dielectric dispersion, or obtained from established parameter-extraction methods detailed in [12].

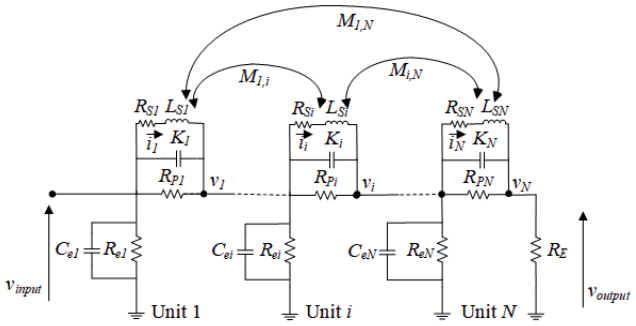

Fig. 2. Disc-based detailed model

By applying Kirchhoff's voltage and current laws to the equivalent circuit shown in Fig. 2, the voltage v_i and current i_i of the ith unit can be obtained. Therefore, the FR of the disc-based winding model can be determined using the applied voltage, v_{input}, and the calculated output voltage, v_{output}, as follows [5, 6]:

$$FR(\omega)=20\log_{10}\left|\frac{v_{output}(\omega)}{v_{input}(\omega)}\right| \quad (4)$$

Jalal Piri, Hassan Reza Mirzaei, Mohammed Bilal Ghorbal, Ebrahim Rahimpour, An
Accurate Detailed Model for Transformer Disc Windings Suitable for Medium Frequency Range, Journal of Energy, vol. 75 Number 3 (2026), 56–60
https://doi.org/10.37798/2026753779
© 2026 Copyright for this paper by authors. Use permitted under Creative Commons Attribution-NonCommercial (CC BY-NC) 4.0 International License

C. Proposed turn-based detailed RLCM model

The proposed turn-based detailed RLCM model shares the fundamental principles of the disc-based RLCM framework; however, instead of grouping multiple turns into a single disc unit, each unit in the turn-based model corresponds to an individual turn of the winding. Accordingly, a winding composed of D discs with P turns per disc is represented by $n=D\times P$ RLCM units, as depicted in Fig. 3. In this formulation, the parallel resistance R_{di} and capacitance C_{di} elements characterize, respectively, the insulation loss and capacitance between two adjacent turns (units) associated with consecutive discs. It should be noted that, in addition to considering the capacitances between neighbour turns of two adjacent discs, the capacitances of non-neighbour turns, such as turn 1 of disc 1 and turn 5 of disc 2, should also be considered in the model. However, this will complicate the model and increase the computation time. The analytical expressions based on the winding dimensions used in [12] to compute the RLCM parameters for the disc-based model are equally applicable to determine the corresponding elements of the turn-based units, as both approaches are grounded in fundamental electromagnetic and lumped-parameter representations of the winding's electrical behaviour. Once the per-unit RLCM parameters are established, Kirchhoff's voltage and current laws are applied to the model in Fig. 3 to form the required RLCM equations. Next, the Ordinary Differential Equations (ODEs) in the Matlab software are applied to them, and therefore, the voltages ($v_1 \ldots v_P$) and currents ($i_1 \ldots i_P$) for each turn are obtained. By these quantities, the simulated FR of the turn-based detailed model can be obtained from the input voltage of the first turn, v_{input}, and the output voltage of the last turn, v_{output}, of the winding, according to Eq. (4).

III. Measuring the Frequency Response of the Test Winding

The test winding shown in Fig. 4(a) is an HV, non-interleaved disc winding comprising 44 discs, each with 7 turns. To replicate the effects of a grounded core on the winding's electrical behaviour, an earthed metallic shield was inserted inside the winding since the actual winding assembly does not include an iron core. This shield simulates the R_{ei} and C_{ei} elements in the model. Consequently, the core magnetic effect is not included in the simulation. As such, high-frequency analysis is initiated at 10 kHz to avoid low-FRs dominated by omitted core effects [5], [12]. The geometric dimensions of the winding are detailed in Fig. 4(b).

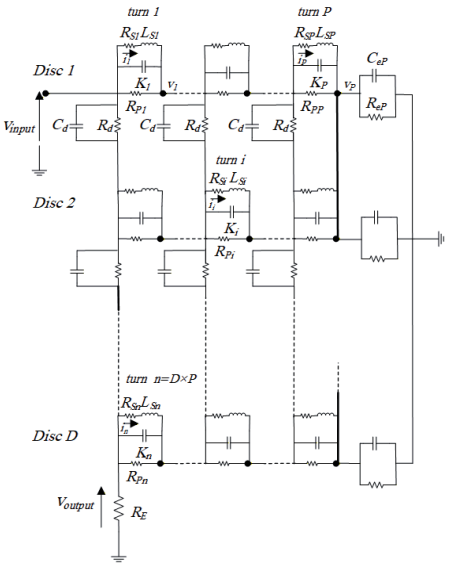

Fig. 3. turn-based detailed model.

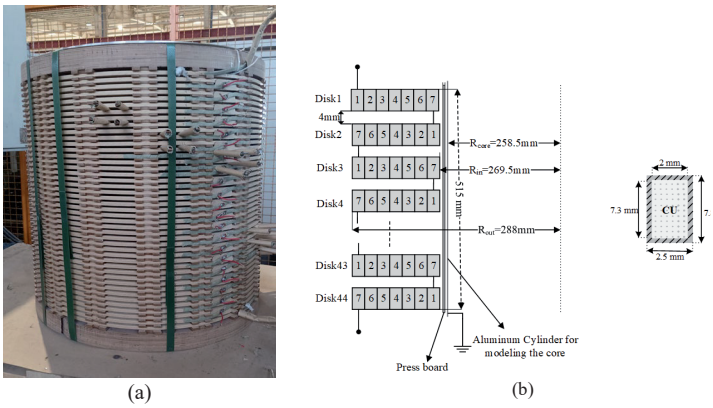

Fig. 4. HV winding configuration (a), and its dimensions (b).

In the present study, the Sweep Frequency Response Analysis (SFRA) technique is employed to measure the FR of the test winding, as shown in Fig. 5(a). SFRA is a widely accepted diagnostic method for transformer condition assessment, based on measuring the winding's FR over a broad frequency range by injecting a sinusoidal excitation signal and observing the resulting response at the opposite terminal [5]. As illustrated in Fig. 5(b), the SFRA device sequentially applies a low-amplitude sinusoidal voltage v_i with frequencies swept from 10 kHz to 2 MHz to one terminal of the winding and measures the induced voltage v_o at the other terminal with respect to earth at each frequency. Because the SFRA instrument and measurement setup include a matched 50 Ω termination, the grounded resistance in all studied models is set to R_E=50 Ω to accurately represent the measurement conditions.

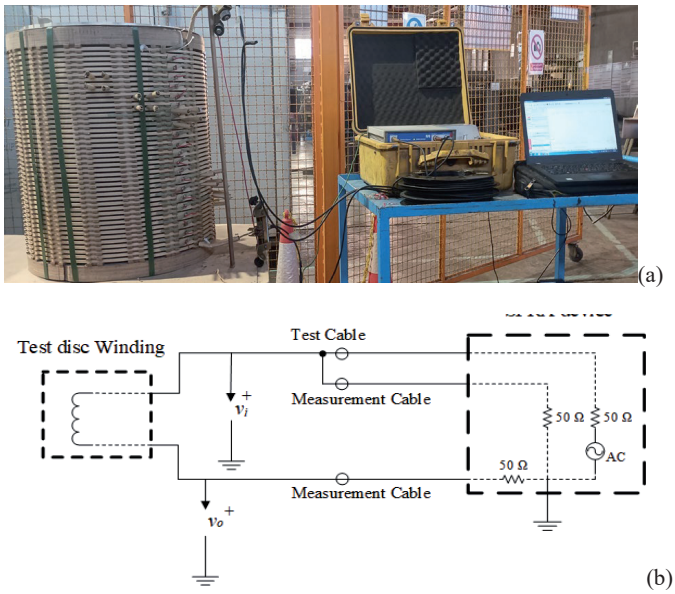

Fig. 5. (a): The test setup for measuring the frequency response of the winding. (b): the schematic circuit .

V. Comparing the Simulated and Measured Frequency Responses

The test winding was simulated using three different modelling approaches: the MTL model, the disc-based detailed RLCM model, and the proposed turn-based detailed RLCM model. By applying Eqs. (3) and (4), the FRs corresponding to each model configuration were computed. To evaluate the modelling accuracy of these methods, Fig. 6(a–c) presents a direct comparison between the measured FR obtained from SFRA measurements and the simulated FRs from each model.

Jalal Piri, Hassan Reza Mirzaei, Mohammed Bilal Ghorbal, Ebrahim Rahimpour, An Accurate Detailed Model for Transformer Disc Windings Suitable for Medium Frequency Range, Journal of Energy, vol. 75 Number 3 (2026), 56–60
https://doi.org/10.37798/2026753779
© 2026 Copyright for this paper by authors. Use permitted under Creative Commons Attribution-NonCommercial (CC BY-NC) 4.0 International License

As shown in Fig. 6(a), the MTL model achieves reasonable agreement with the measured FR at lower frequencies but diverges significantly beyond approximately 900 kHz. In Fig. 6(b), the disc-based detailed model, treating every two adjacent discs as a single unit, shows notable discrepancies in the resonance amplitudes compared to the measured FR. In contrast, Fig. 6(c) demonstrates that the proposed turn-based detailed model yields a simulated FR that closely aligns with the measured response up to 2 MHz. This improved correlation illustrates the turn-based representation's enhanced ability to capture high-frequency winding behaviour, including resonant features essential for accurate FR modelling.

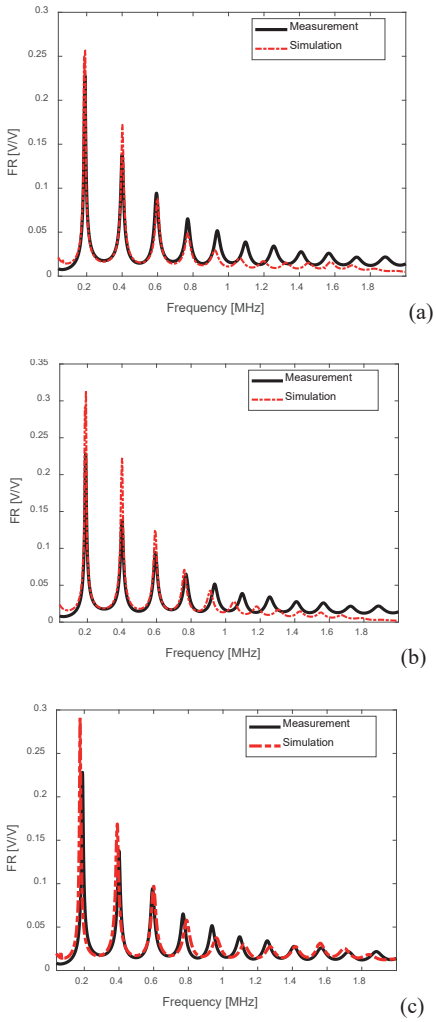

Fig. 6. Comparing the measured frequency response and the simulated ones obtained from (a) MTL model, (b) disc- based detailed model, (c) proposed turn-based detailed model.

In addition to visual inspection, quantitative metrics are needed to evaluate agreement between measured and simulated FRs. In this work, the Normalized Cross-Correlation (NCC) index is used to assess the similarity between measured and simulated FR curves. NCC is a standard statistical measure of similarity between two data series: values close to 1 indicate strong agreement, while values near 0 correspond to low or no similarity [13]. For the FR comparisons in Fig. 6, the NCC value calculated for the MTL model and measured FRs is 0.80, and for the disc-based detailed model is 0.75. In contrast, the proposed turn-based detailed model achieves an NCC of 0.94, indicating a markedly higher degree of similarity. To further characterize differences between measured and simulated FRs, additional numerical indices that are widely used in FRA interpretation are also evaluated. Among these, the Index of Frequency Deviation (IFD) measures relative shifts in resonance frequencies between two FR curves, while the Index of Amplitude Deviation (IAD) quantifies differences in peak amplitudes, providing sensitivity to both frequency and magnitude discrepancies. These indices can be obtained as follows [14]:

$$IFD_i = \frac{f_{s,i} - f_{m,i}}{f_{m,i}} \times 100 \tag{5}$$

where $f_{s,i}$ and $f_{m,i}$ represent the ith resonance frequencies associated with the simulated and measured FRs, respectively. The IAD quantifies the relative deviation in amplitude at the ith resonant frequency between the simulated and measured FR curves and is defined as follows [14]:

$$IFD_i = \frac{f_{s,i} - f_{m,i}}{f_{m,i}} \times 100 \tag{6}$$

where $A_{s,i}$ and $A_{m,i}$ represent the amplitude of the simulated and measured FR at the ith frequency resonance, respectively.

Both the measured and simulated FRs exhibit 11 distinct resonance frequencies. Therefore, using Eqs. (5) and (6), the IFD_i and IAD_i are calculated and presented in Table I. It can be observed from Table I that, for resonance frequencies 6 through 11, which lie within the 1–2 MHz range, the turn-based detailed model yields lower IFD and IAD values compared to the other models. This indicates closer alignment between the resonance positions and amplitudes and the measured FR in the high-frequency region. For resonance frequencies 1 to 5, corresponding to the lower-frequency spectrum, the indices for the turn-based model are also reasonable and comparable to those of the other models.

Considering the visual comparison of the FR curves in Fig. 6 and the calculated NCC, IFD, and IAD values, the results indicate that the proposed turn-based detailed model provides a more accurate representation of the transformer winding's FR up to 2 MHz than the alternative modelling approaches.

TABLE I.
THE IFD AND IAD FOR ALL FREQUENCY RESONANCES

Resonance number	IFD %			IAD %		
	MTL model	disc-based detailed model	Turn-based detailed model	MTL model	disc-based detailed model	Turn-based detailed model
1	0.69	0.89	-7.02	12.4	37.50	27.98
2	0.26	-0.15	-2.24	24.22	61.26	22.06
3	0.52	-0.11	0.95	-6.43	31.77	3.36
4	0.55	-1.36	2.62	-24.65	9.74	-11.13
5	-1.93	-3.47	2.62	-42.86	-16.32	-27.05
6	-2.49	-4.03	2.02	-47.64	-29.12	-22.47
7	-4.40	-6.58	1.45	-49.06	-36.30	-19.01
8	-6.27	-7.83	2.50	-45.17	-38.71	2
9	-7.1	-8.60	-0.30	-42.29	-44.33	20.37
10	-8.25	-9.91	-1.52	-29.13	-39.47	19.38
11	-10	-11.63	-2.71	-43.63	-56.38	-13.89

Jalal Piri, Hassan Reza Mirzaei, Mohammed Bilal Ghorbal, Ebrahim Rahimpour, An Accurate Detailed Model for Transformer Disc Windings Suitable for Medium Frequency Range, Journal of Energy, vol. 75 Number 3 (2026), 56–60
https://doi.org/10.37798/2026753779
© 2026 Copyright for this paper by authors. Use permitted under Creative Commons Attribution-NonCommercial (CC BY-NC) 4.0 International License

V. Conclusion

This paper presented a turn-based, detailed RLCM model for transformer disc windings aimed at improving frequency response accuracy in the medium-frequency range. By representing each turn with lumped RLCM elements, the proposed model bridges the gap between conventional disc-based models and computationally intensive MTL approaches. Experimental validation using SFRA measurements demonstrated that the proposed model accurately reproduces winding behavior up to 2 MHz. Quantitative comparisons using NCC, IFD, and IAD indices confirmed significantly greater agreement with measured responses than with existing models. The results highlight the model's superior ability to capture high-frequency resonances, which are critical for reliable fault detection. Moreover, the proposed approach maintains manageable modeling complexity while enhancing diagnostic fidelity. Consequently, this model provides an effective and practical framework for transformer condition monitoring and fault analysis. The proposed methodology can support more accurate interpretation of FRA signatures and improve the reliability assessment of power transformers. However, in future work, the proposed method should be applied to real transformers and evaluated in cases where the transformer includes a magnetic core and multiple windings.

References

[1] Power Transformers-Part 3: Insulation levels, dielectric tests and external clearances in air, IEC60076-3, 2000.

[2] Gustavsen, B., and Ebrahim Rahimpour. "High-Frequency Transformer and Reactor Models for Network Studies, Part A: White-Box Models." *Conseil International des Grands Réseaux Électriques (CIGRE) TB 900* (2023): 1-203.

[3] Gustavsen, B., and Ebrahim Rahimpour. "High-Frequency Transformer and Reactor Models for Network Studies, Part B: Black-Box Models." *Conseil International des Grands Réseaux Électriques (CIGRE) TB 901* (2023): 1-88.

[4] Gustavsen, B., and Ebrahim Rahimpour. "High-Frequency Transformer and Reactor Models for Network Studies, Part C: Grey Box Models." *Conseil International des Grands Réseaux Électriques (CIGRE) TB 902* (2023): 1-102.

[5] Aghmasheh, Reza, Vahid Rashtchi, and Ebrahim Rahimpour. "Gray box modeling of power transformer windings based on design geometry and particle swarm optimization algorithm." *IEEE transactions on power delivery* 33.5 (2018): 2384-2393.

[6] Rahimpour, Ebrahim, Mehdi Jabbari, and Stefan Tenbohlen. "Mathematical comparison methods to assess transfer functions of transformers to detect different types of mechanical faults." IEEE transactions on power delivery 25.4 (2010): 2544-2555.

[7] Hosseini, SM Hassan, and Peyman Rezaei Baravati. "New high frequency multi-conductor transmission line detailed model of transformer winding for PD study." *IEEE Transactions on Dielectrics and Electrical Insulation* 24.1 (2017): 316-323.

[8] Liang, Guishu, et al. "Modeling of transformer windings under very fast transient overvoltages." *IEEE Transactions on electromagnetic compatibility* 48.4 (2006): 621-627.

[9] Ji, T. Y., W. H. Tang, and Q. H. Wu. "Detection of power transformer winding deformation and variation of measurement connections using a hybrid winding model." *Electric power systems research* 87 (2012): 39-46.

[10] Ping, Zhang, et al. "Order-reduced method of voltage transfer function of transformer windings based on vector fitting." *2008 27th Chinese Control Conference*. IEEE, 2008.

[11] Wang, Song, et al. "A new multi-conductor transmission line model of transformer winding for frequency response analysis considering the frequency-dependent property of the lamination core." *Energies* 11.4 (2018): 826.

[12] Rahimpour, Ebrahim, et al. "Transfer function method to diagnose axial displacement and radial deformation of transformer winding." *IEEE Power Engineering Review* 22.8 (2002): 70-70.

[13] De, Abhinandan, and Nirmalendu Chatterjee. "A fuzzy ARTMAP fault classifier for impulse testing of power transformers." IEEE Transactions on Dielectrics and Electrical Insulation 11.6 (2004): 1026-1036.

[14] T. Leibfried, "Influence of winding short circuits on the transfer function of power transformer windings by example of homogeneous coils,"*Elect. Eng.*, vol. 81, no. 2, pp. 99–108, May 1998.

© 2026 Copyright for this paper by authors. Use permitted under Creative Commons Attribution-NonCommercial (CC BY-NC) 4.0 International License